1 MOUNT PANEL ON WALL

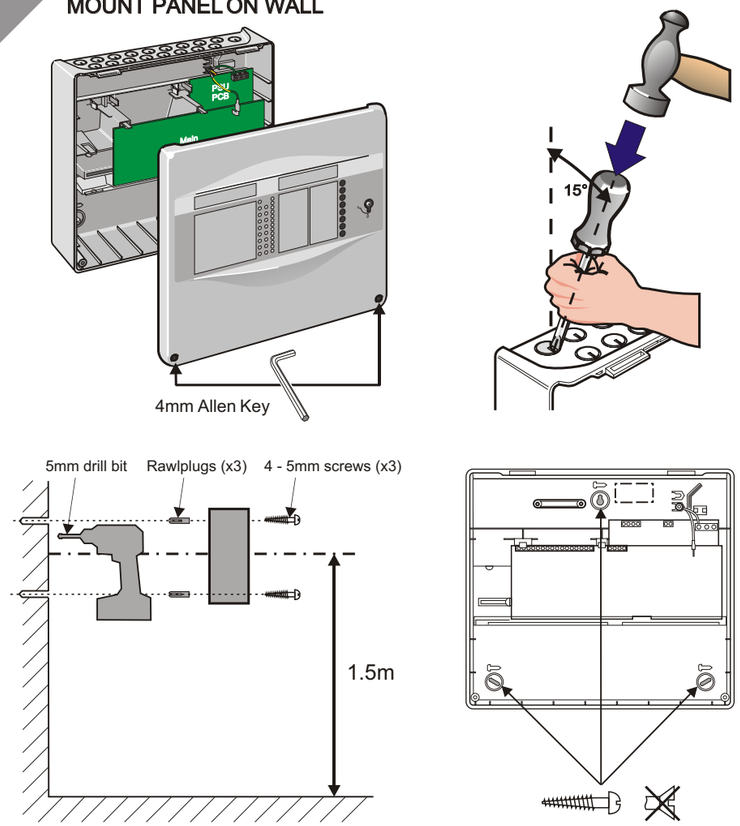

2 CONNECT MAINS INPUT SUPPLY

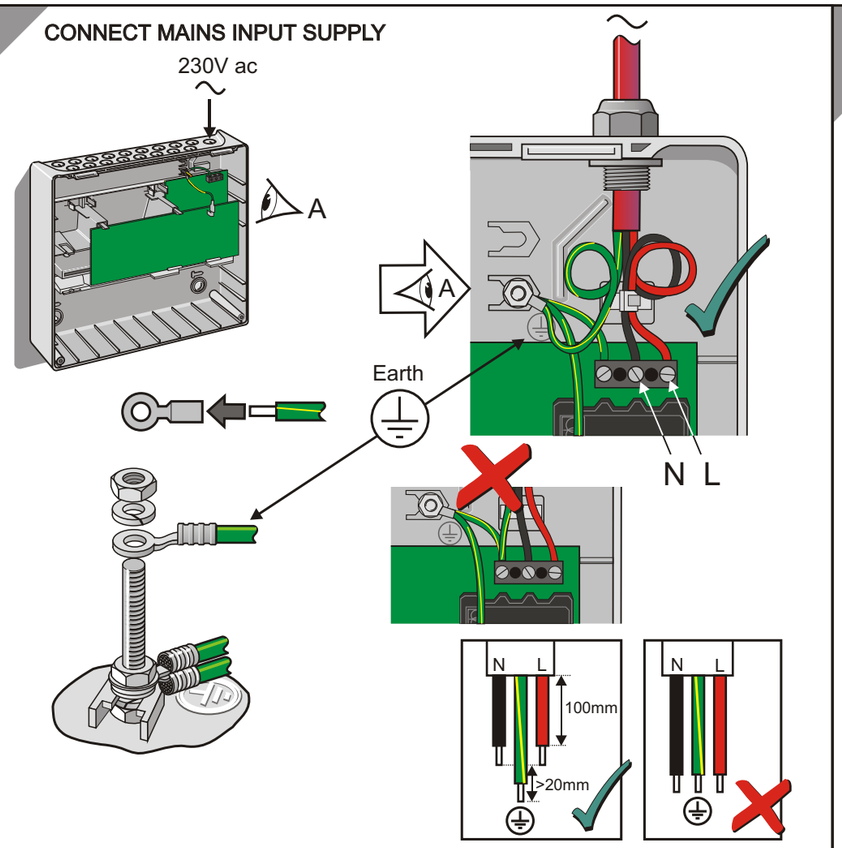

3 CONNECT BATTERIES

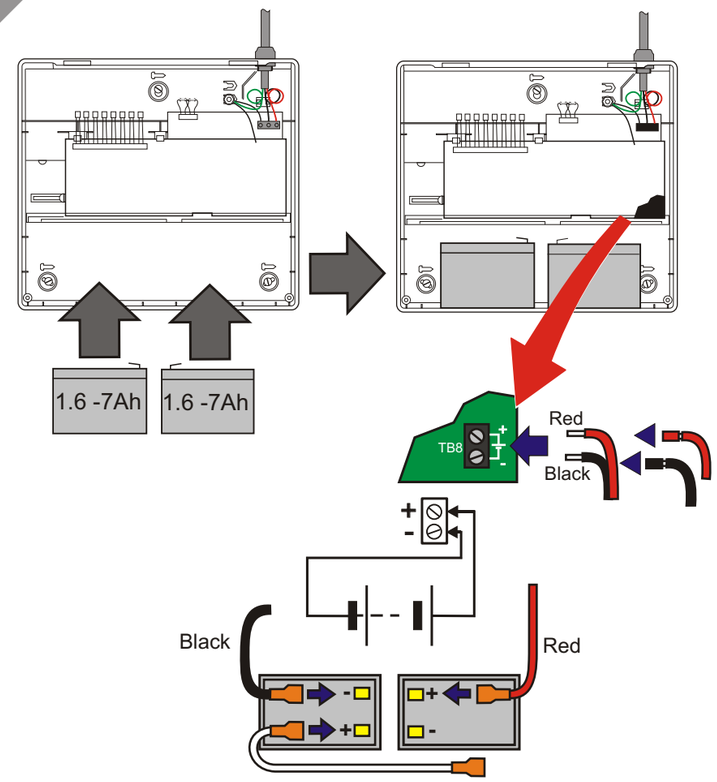

4 CHECK CONTROL PANEL

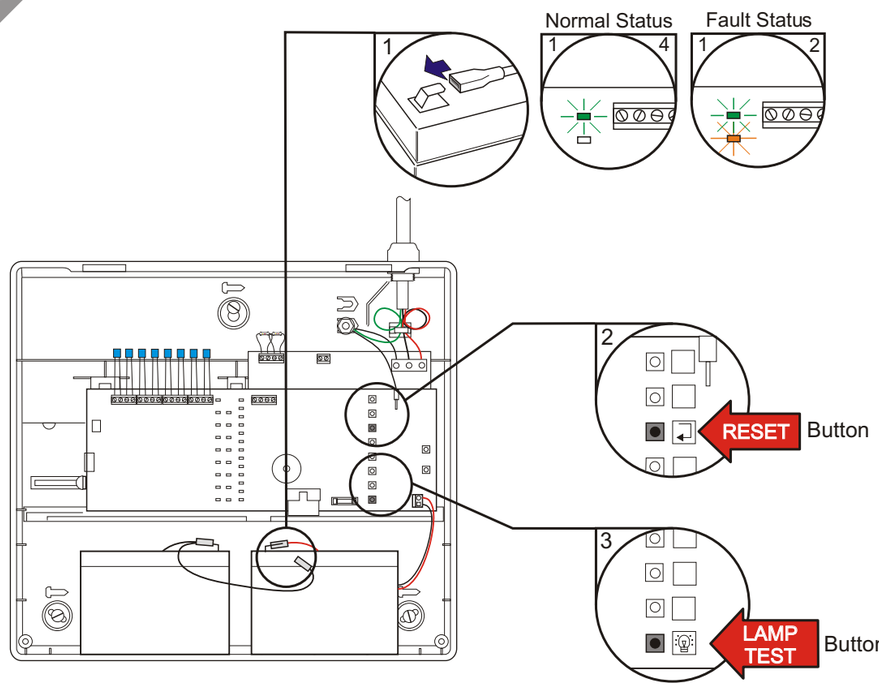

1. Power on and connect batteries - Power LED only should light.
2. If fault indications exist, press RESET pushbutton. If faults still exist refer to fault finding chart in manual.
3. Perform a lamp test - press LAMP TEST - to check that all LEDs work.
4. No faults exist - FAULT LED not lit - disconnect all power and remove the EOL devices from the terminals to be used and proceed to step 5.

5 CONNECT FIELD DEVICES

See overleaf for details of panel indicators and controls.

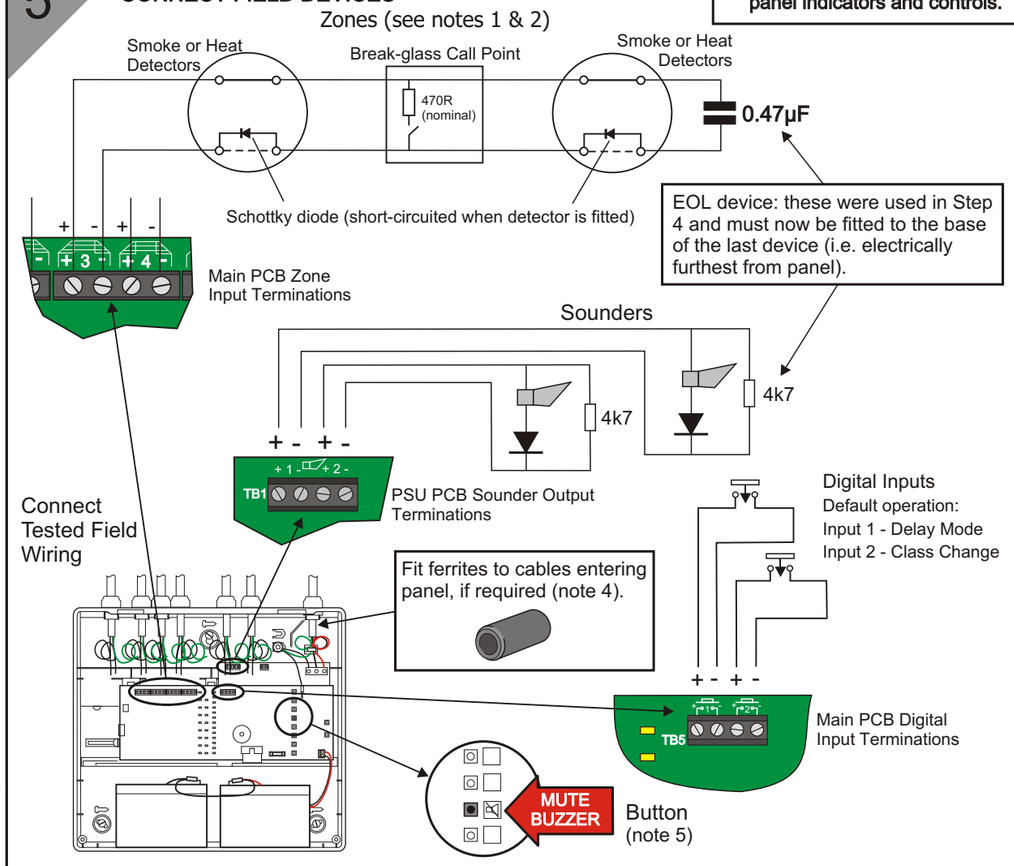

6 CLOSE PANEL & TEST

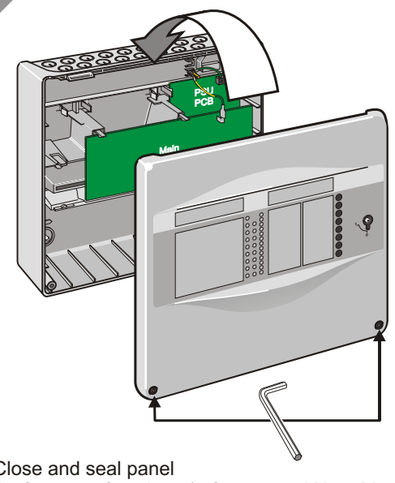

1. Close and seal panel
2. Perform test functions (refer to panel User Manual)

Notes:

1. Zone wiring diagram is based on typical detectors. Check manual and manufacturer's instructions when specific manufacturer's detectors are used.
2. Maximum of 2mA per zone (typically 20 optical smoke detectors per zone).
3. Maximum alarm current (including AUX output) is 1A (total all outputs).
4. Ferrites are provided for power supply, sounder circuit and Auxiliary output cables.
5. If any wiring faults are found buzzer will sound. Press MUTE BUZZER to silence internal buzzer until all faults are cleared.

Key to EOL Device Types

0.47µF capacitor

4k7 resistor

MCP1A - Manual Call Point

Fit to Zone Detection Circuits

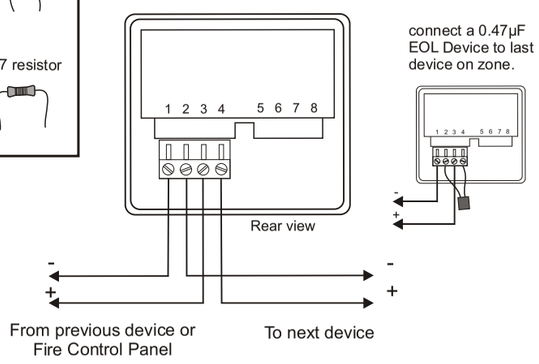

HRZ - 1000BSD - Detector Base

Fit to Zone Detection Circuits

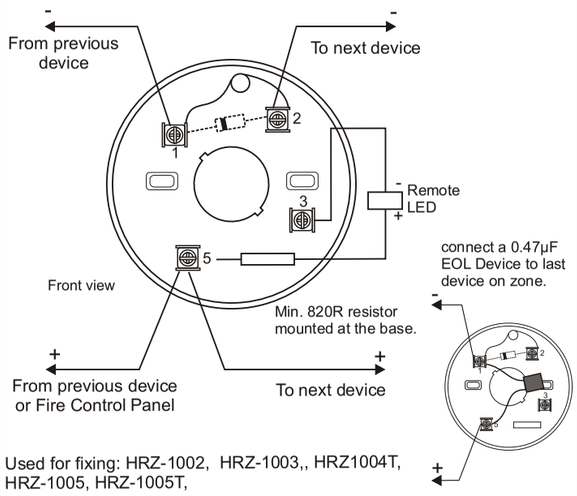

Used for fixing: HRZ-1002, HRZ-1003,, HRZ1004T, HRZ-1005, HRZ-1005T,

AFB6 - Fire Alarm Bell

Fit to Sounder Output Circuits

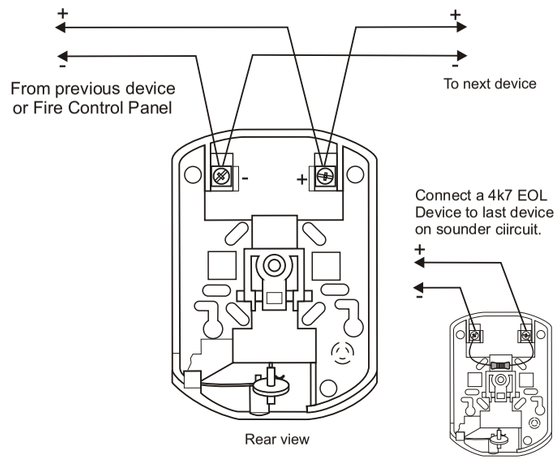

NS4 - Wall Mounting Sounder

Fit to Sounder Output circuits

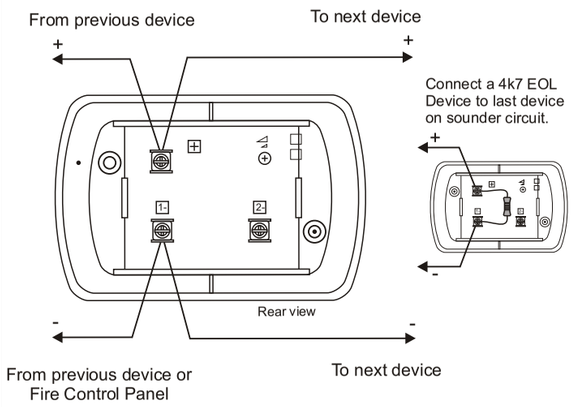

NBS4 - Base Sounder

Fit to Sounder Output circuits

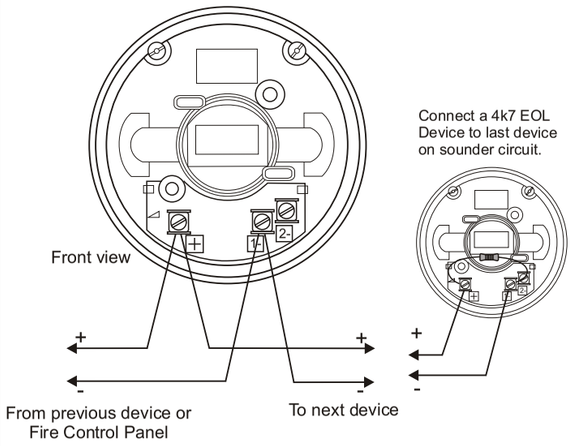

NX2/R/R - Xenon Strobe

Fit to Sounder Output circuits

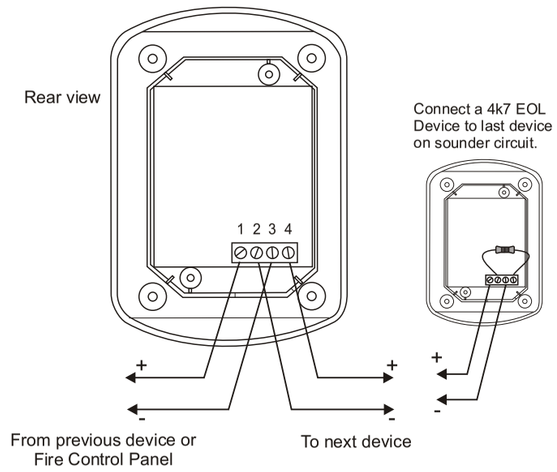

QUICK START INSTALLATION GUIDE

INTERNAL PANEL INDICATORS & CONTROLS

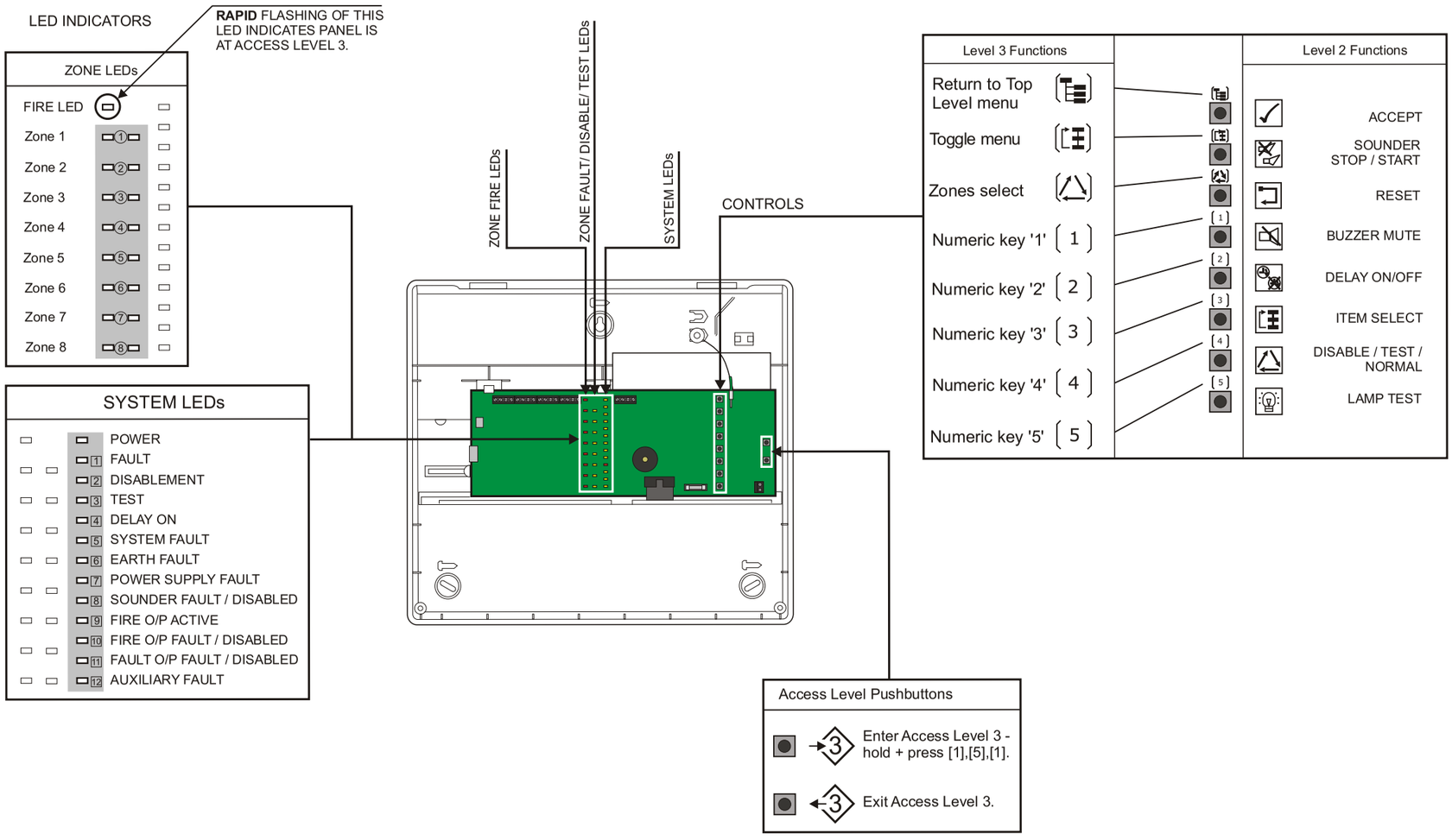

997-504, Issue 1 April 2004